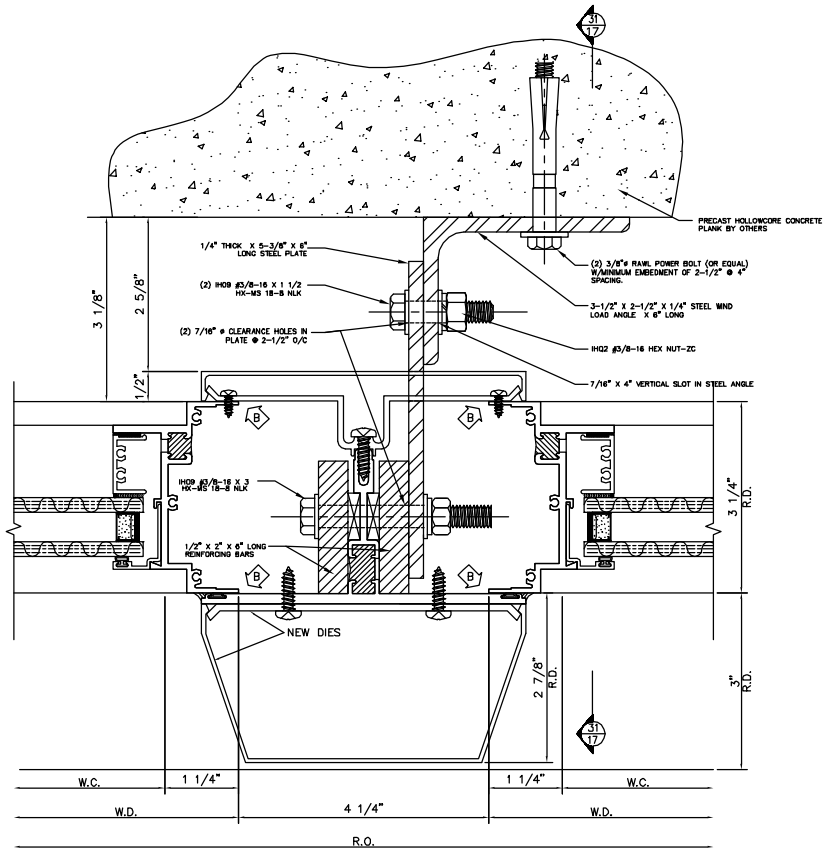

30 ARCH'T REF. --/--

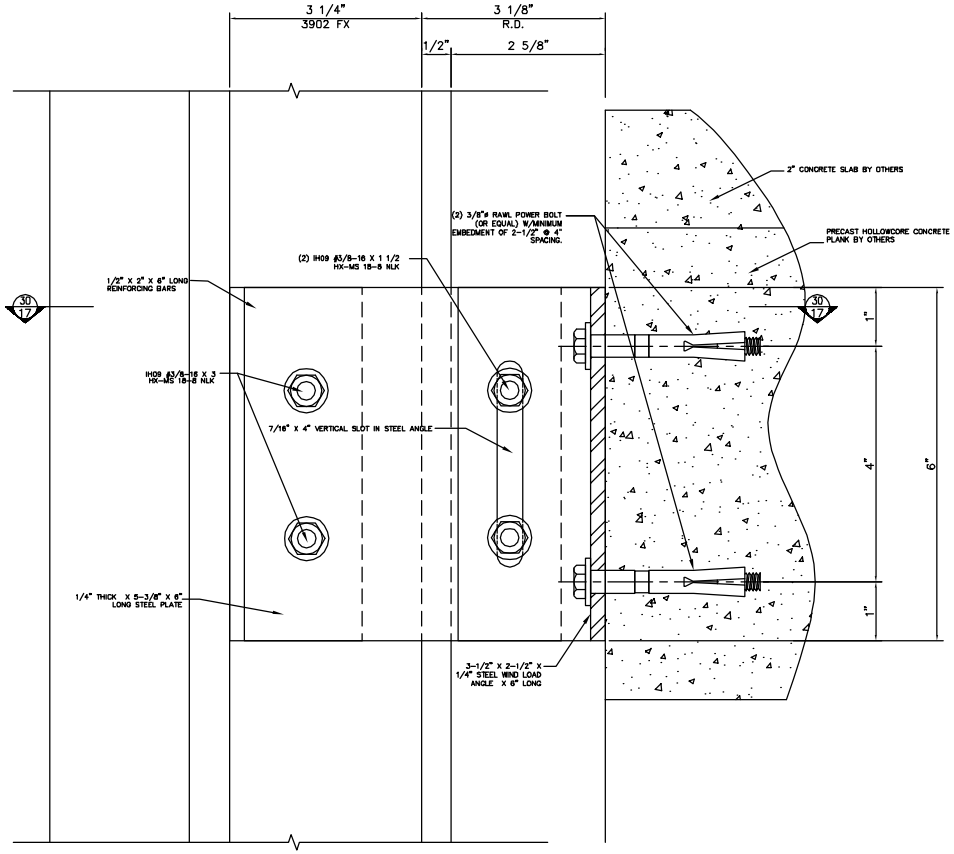

31 ARCH'T REF. --/--

REVISIONS	BY

THESE DRAWINGS PREPARED BY:
ARCHITECTURAL DRAFTING SERVICE, INC.
3435 METAMORA ROAD, SUITE B
METAMORA, MI 48455
(810) 678-3112 PHONE
(810) 678-2223 FAX
WWW.DRAFTINGSERVICE.COM

CONSTRUCTION MANAGER: A.B.C., INC.
CUSTOMER: X.Y.Z., INC.
CUSTOMER LOCATION: SOMEWHERE, U.S.A.

PROJECT NAME: SAMPLE
PROJECT LOCATION: SOMEWHERE, U.S.A.
ARCHITECT: SAMPLE ARCHITECT

DRAWN BY J.O.R.
CHECKED A.D.S.
DATE 09-01-09
SCALE FULL
DRAWING NO. 1234A
SHEET 11

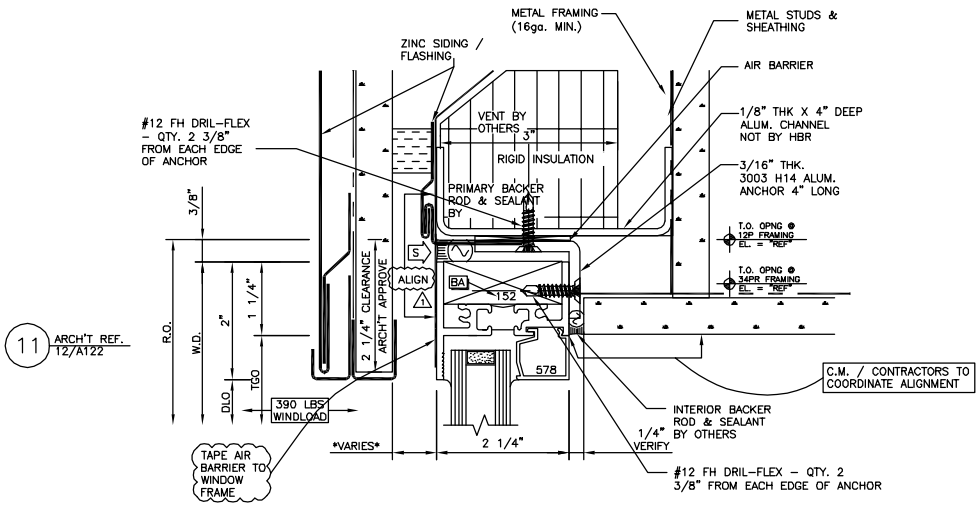

11 ARCH'T REF. 12/A122

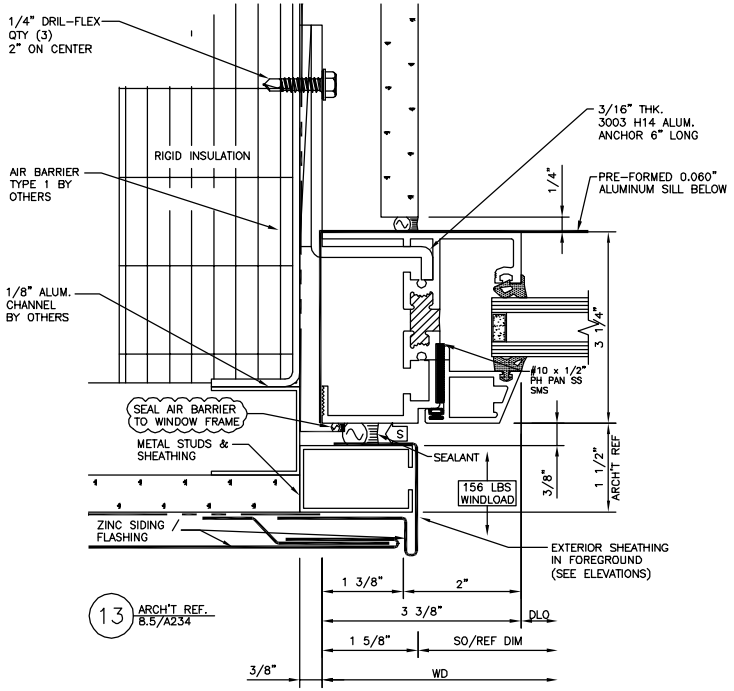

13 ARCH'T REF. 8.5/A234

ARCH'T. C.M.NOTE:
ALL WINDOW FRAMING IS TYPICALY CLEAR ANODIZED UNLESS OTHERWISE SPECIFIED ON DETAILS AS " BA " (BLACK ANODIZED)

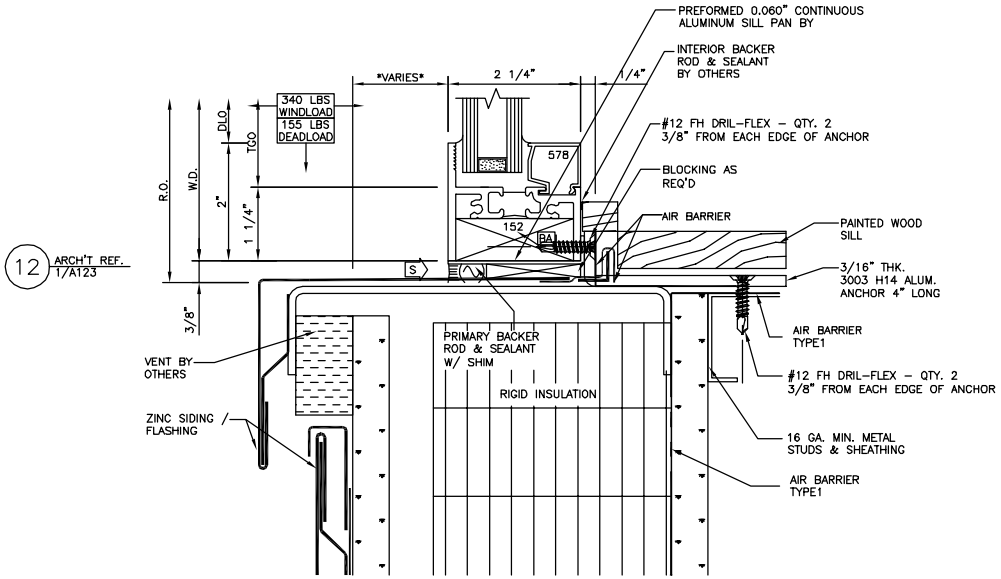

12 ARCH'T REF. 1/A123

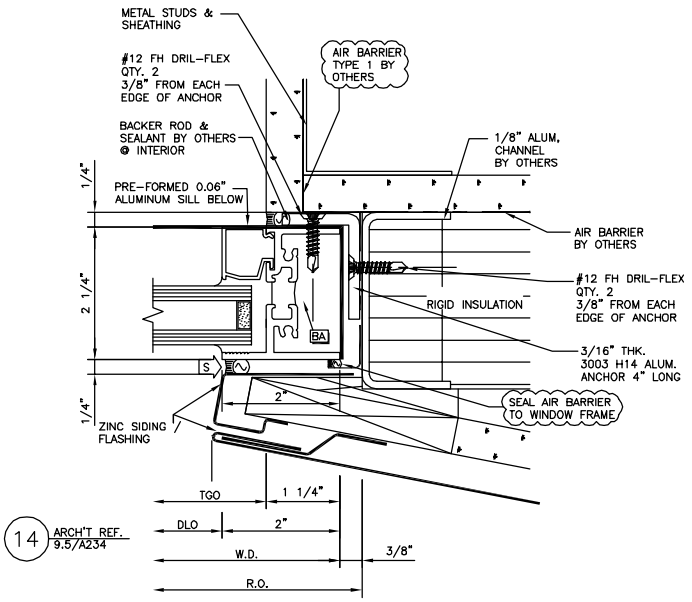

14 ARCH'T REF. 9.5/A234

REVISIONS	BY

THESE DRAWINGS PREPARED BY:
ARCHITECTURAL DRAFTING SERVICE, INC.
3435 METAMORA ROAD, SUITE B
METAMORA, MI 48455
(810) 678-3112 PHONE
(810) 678-2223 FAX
WWW.DRAFTINGSERVICE.COM

CONSTRUCTION MANAGER: A.B.C., INC.
CUSTOMER: X.Y.Z., INC.
CUSTOMER LOCATION: SOMEWHERE, U.S.A.

PROJECT NAME: SAMPLE
PROJECT LOCATION: SOMEWHERE, U.S.A.
ARCHITECT: SAMPLE ARCHITECT

DRAWN BY J.O.R.
CHECKED A.D.S.
DATE 09-01-09
SCALE FULL
DRAWING NO. 1234A
SHEET C1