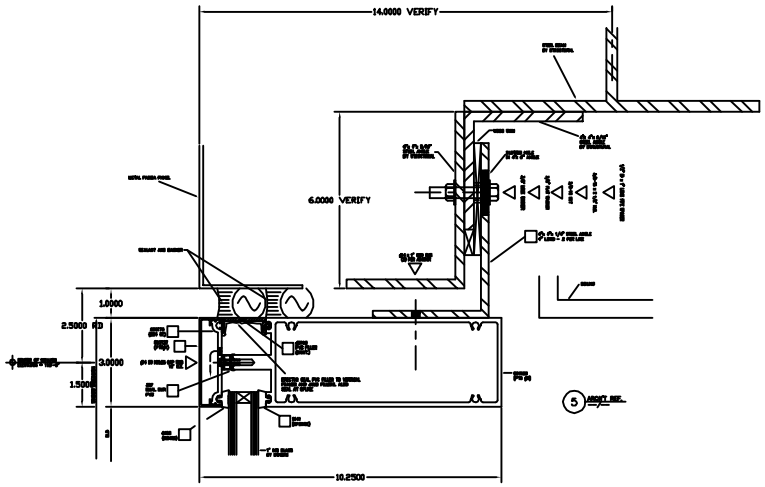

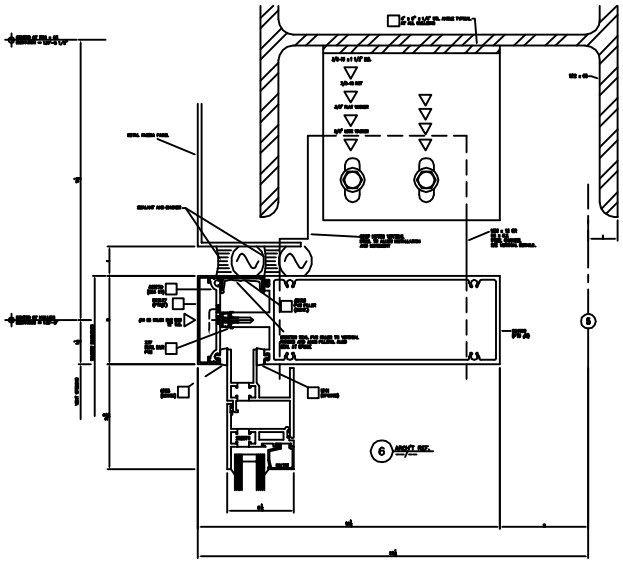

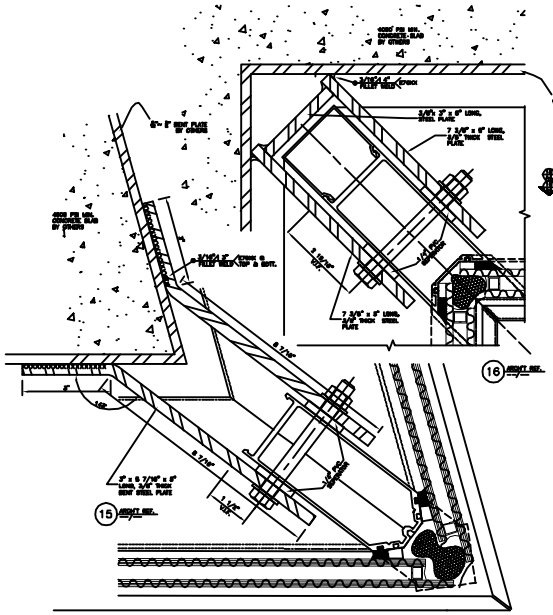

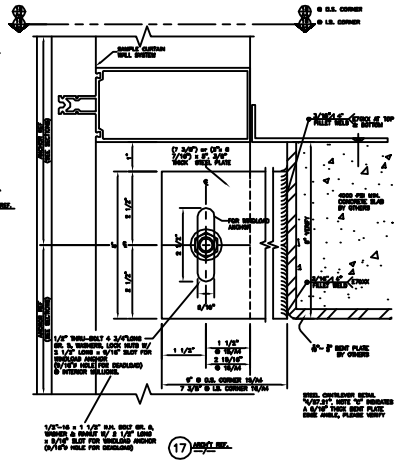

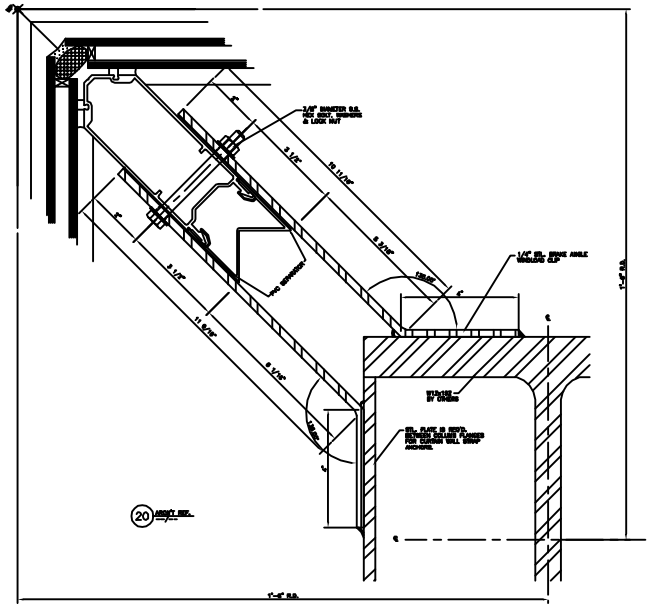

REVISIONS	BY

THESE DRAWINGS PREPARED BY:
ARCHITECTURAL DRAFTING SERVICES, INC.
3435 METAMORA ROAD, SUITE B
METAMORA, MI 48455
(810) 678-3112 PHONE
(810) 678-2223 FAX
WWW.DRAFTINGSERVICE.COM

CONSTRUCTION MANAGER: A.B.C., INC.

CUSTOMER: X.Y.Z., INC.

CUSTOMER LOCATION: SOMETHERE, U.S.A.

PROJECT NAME: SAMPLE

PROJECT LOCATION: SOMETHERE, U.S.A.

ARCHITECT: SAMPLE ARCHITECT

DRAWN BY	J.O.R.
CHECKED	A.D.S.
DATE	09-01-09
SCALE	FULL
DRAWING NO.	1234A
SHEET	22

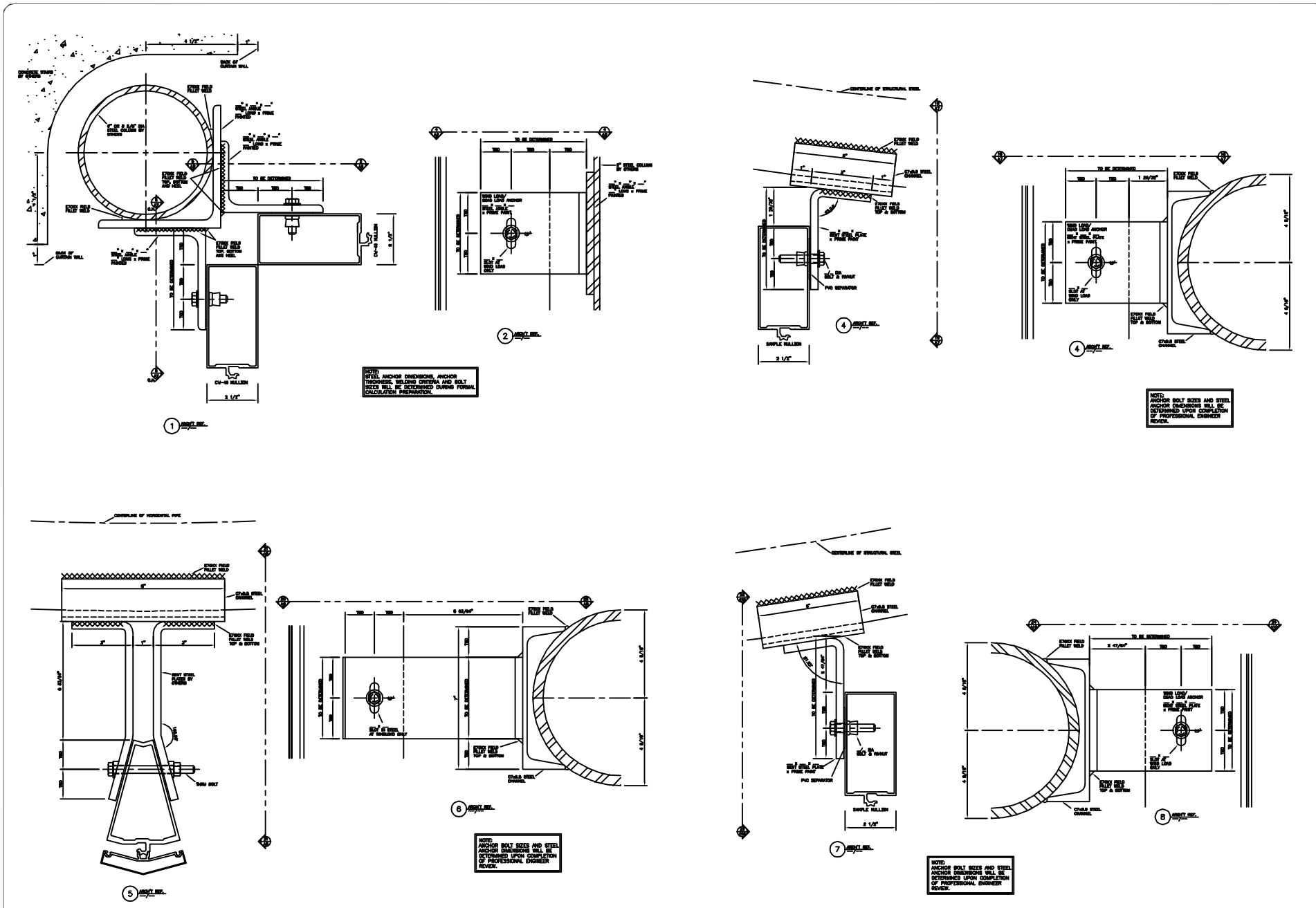

REVISIONS	BY

THESE DRAWINGS PREPARED BY:

ARCHITECTURAL DRAFTING SERVICES, INC.
3435 METAMORA ROAD, SUITE B
METAMORA, MI 48455
(810) 678-3112 PHONE
(810) 678-2223 FAX
WWW.DRAFTINGSERVICE.COM

CONSTRUCTION MANAGER: A.B.C., INC.

CUSTOMER: X.Y.Z., INC.

CUSTOMER LOCATION: SOMEWHERE, U.S.A.

PROJECT NAME: SAMPLE

PROJECT LOCATION: SOMEWHERE, U.S.A.

ARCHITECT: SAMPLE ARCHITECT

DRAWN BY J.O.R.

CHECKED A.D.S.

DATE 09-01-09

SCALE FULL

DRAWING NO. 1234A

SHEET A2